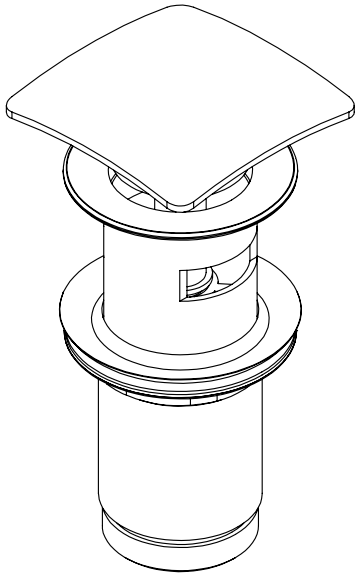

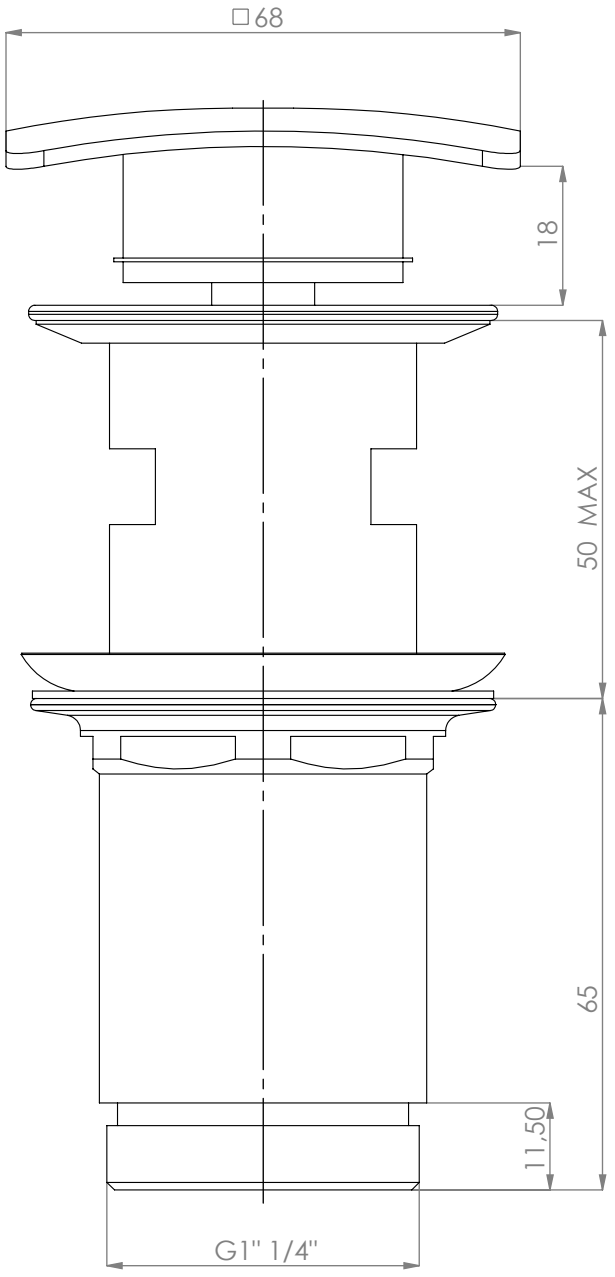

ESC. 1:1	PLAN Brass Click Clack Pop-up Basin Waste		
18/04/2019	SANITERRA®	REF	16201104
		REV	0